慈溪市万捷电子有限公司
CIXI WANJIE ELECTRONIC CO., LTD

产品规格书
product specification

型号 Model	线径 Wire range mm^2	IEC技术参数 IEC datasheet		UL技术参数 UL datasheet		尺寸mm Dimensions							
		电流 Rated current	电压 Rated Voltage	电流 Rated current	电压 Rated Voltage	螺丝 Screw	Unit	A	B	C	D	E	F
MY8HS+1.2	0.5-4.0	24A	450V	17.5A	300V	M2.6x5	(mm)	93.7	17.0	14.2	8.0	Ø2.8	2.9*3.4
MY10HS+1.2	1.0-6.0	41A	450V	26A	300V	M3.0x6	(mm)	116.5	20.3	16.9	10.0	Ø3.2	3.45*4.0

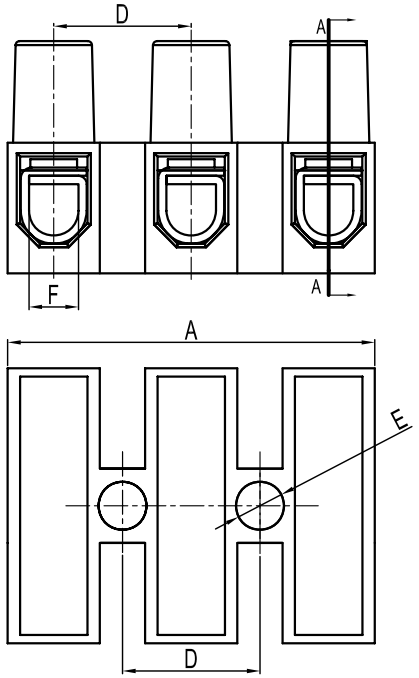

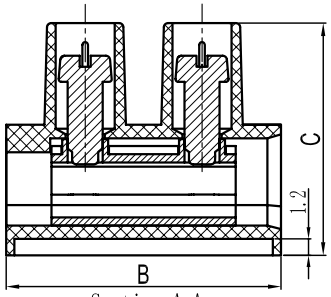

Section A-A

型号/Model:MY □ HS+1.2
底部/Base:With1.2mm elevated base
螺丝/Screws:steel Zinc plated
方块/Clamp:Carbon steel Zinc plated
材质/Housing:PA66,UL94V-2
温度范围/Temp Range:-40° C~+105° C
接线排数/Poles available:2-12 poles

订购方式：
HOW TO ORDER

□□ - □ □ P - □□□ - 客户需求 Custmor Request (x x x)

型号/Model

极数/POLE

0.未定义/No definition
1.单间距/Sing pitch
2.双倍间/Double pitch

灰色/Grey	10	绿色/Green	40	透明/Transparent	70
蓝色/Blue	20	橙色/Orange	50	黄色/Yellow	80
黑色/Black	30	红色/Red	60	白色/White	90

TOLERANCES EXCEPT AS NOTED

	linear dimension					fillet	chamfer		∠ short angle sid				⌯	—	▱	//	⊥
variable range	to 6	over 6 to 30	over 30 to 120	over 120 to 480	over 480 to	all	to 6	over 6 to	to 10	over 10 to 50	over 50 to 120	over 120 to	all	to 5	over 5 to 30	over 30 to 120	over 120 to
tolerance	±0.1	±0.2	±0.3	±0.5	±0.9	±0.2	±0.5	±1	1°	30'	20'	10'	0.5	0.025	0.06	0.12	0.4

单位/UNITS	mm	尺寸/SIZE	A4	比例/SCALE	2:1	第一视角/FIRST ANGLE PROJECTION
慈溪市万捷电子有限公司 CIXI WANJIE ELECTRONIC CO., LTD						名称/NAME MY□HS+1.2-XXP-1YY-00A